MVSI

The MVSI series represents the line of reference products for manufacturer's of vibrating machines and plants operating in many industrial sectors and is made up of the largest range on the market, with centrifugal force values up to 30500 Kgf (300kN).

The MVSI series has been conceived to guarantee higher performance in all conditions and environments and complies with the most recent IEC and EN international standards for use in atmospheres with potentially explosive powders.
In particular, the MVSI series can be used in areas 21 and 22.

Technical features

Power supply
Three-phase voltage from 24V to 690V, 50Hz or 60Hz or single-phase 100-130V, 60Hz and 200-240V, 50Hz (single-phase types are supplied without capacitor); suitable for use with an inverter from 20Hz to the base frequency with constant torque load profile.

Polarity
2, 4, 6 and 8 standard poles, 10 and 12 poles on request.

Conformity with European Directives
Low voltage 2006/95/EC; ATEX 94/9/EC.

Reference Regulations
EN 60034-1, IEC/EN 61241-0, IEC/EN 61241-1.

Functioning
Continual service (S1) at maximum declared centrifugal force and electric power. Intermittent services are also possible depending on the type of vibrator and the operating conditions. For detailed information, contact our technical assistance office.

Centrifugal force
Range extended up to 30500 Kgf. (300 kN), with centrifugal force adjustable from 0 to 100%.

Mechanical protection
IP 66 according to IEC 529, EN 60529.

Protection against mechanical impacts
IK 08 according to IEC 68, EN 50102.

Insulation class
Class F (155°C), class H (180°C) on request.

Tropicalization
Standard on all vibrators, with vacuum encapsulation up to gr. AF 33 and 35, with "drop by drop" trickle system for larger sizes.

Ambient temperature
From -20°C to +40°C. Versions for higher or lower temperatures are available on request.

Vibrator thermal protection
Standard PTC rated thermistor heat detectors 130°C (DIN 44081-44082) from size 70, on request for smaller sizes. On request, thermistors with different temperatures and anti-condensation heaters.

Fixing of the vibrator
In all positions and therefore without restriction.

Lubrication
All vibrators are lubricated in the factory and do not require further lubrication if used in normal operating conditions ("FOR LIFE" lubrication). In heavy duty operating conditions periodical re-lubrication may be applied to size 35 and larger.

Terminal box
Large fixed electrical connections. Special shaped terminals allow to fix the power supply cable, protecting it from loosening.

Electric motor
Three-phase asynchronous type. Designed for maximum starting torques and torque curves specific to requirements of vibrating machines. Insulated windings using vacuum encapsulating up to size 35; using the "drop by drop" trickle system with class H resin for larger sizes. The rotor is die cast aluminium.

Casing
In high-tensile aluminium alloy up to size 60, in spheroidal cast iron for larger sizes. Patented shape that improves heat dispersion and lowers normal working temperature at full load.

Category: II 2 D

Level of protection: tD A21 IP66

Temperature class: see tab. page 6-13

EC certificate: LCIE 05 ATEX 6163 X

Areas of use: 21, 22

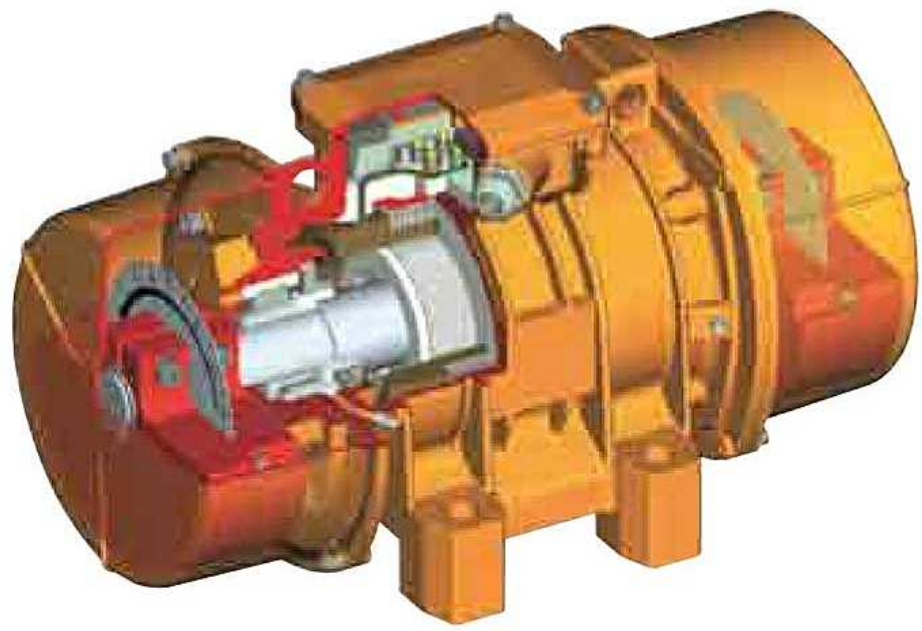

Bearing flange
Constructed in cast iron (spheroidal or grey) or in aluminium with steel bearing seat. The geometry of the flange transmits the load to the casing uniformly.

Bearings
Custom made with particular geometry, especially designed for Italvibras, suitable to support both high radial and axial loads.

Motor shaft
In treated steel alloy (Isothermic hardening) resistant to stress.

Eccentric weights
Allow continual adjustment of the centrifugal force. This adjustment is realized by a graduated scale, which expresses the centrifugal force as a percentage of the maximum centrifugal force.
A patented system (patent N°MO98A000194), called ARS, prevents adjustment errors.

Weight covers
In aluminium alloy. On several sizes split covers are available, please refer to section MVSI-TS on page 14. On request stainless steel AISI 304 weight covers can be supplied.

Painting
Electrostatic surface treatment based on polymerised epoxy polyester powder in oven at 200°C. Tested in salt spray for 500 hours.

Stainless steel protection
On request, corrosion high grade protection (stainless steel micro suspensions in a polyurethanic paint) is available.

Several sizes are available with different mounting bolt patterns.

Certifications

Regulation CAN/CSA - C22.2 N. 100-95,
file n° LR100948 Class 4211 01 –
Motors and generators.

Mechanical protection IP66 (EN 60529),
protection against impacts IK 08
(EN 50102)

II 2 D, tD A21 IP66
IEC/EN 61241-0, IEC/EN 61241-1
Certificate n. LCIE 05 ATEX 6163X

Certificate GOST-R n° РОСС IT.ГБ04.B01154,
standards GOST R 51330.0-99,
GOST R 51330.1-99, GOST R 51330.8-99,
GOST R IEC 61241-1-1-99

Certificate of Conformity
n° IECEx CES 09.0001X
standards IEC 61241-0, IEC 61241-1

Comply with the applicable
European Union directives

MVSI 36 ELECTRIC VIBRATOR SERIES

three-phase

2 poles		
Hz	50	60
RPM	3000	3600

DESCRIPTION						MECHANICAL FEATURES						ELECTRICAL FEATURES			
Part Number	Model	Design	Frame Size	CSA*	II2D Temp. Class	Static Moment* in-lbs		Centrifugal Force lbs		Weight lbs		Power Output HP		Max Current A	
						50 Hz	60 Hz	50 Hz	60 Hz	50 Hz	60 Hz	50 Hz	60 Hz	400 V 50 Hz	460 V 60 Hz
600311	**MVSI 36-380**	**S02**	00	•	120°C	1.0	1.0	**266**	**383**	12.3	12.3	0.18	0.18	0.35	0.30
600312	**MVSI 36-480**	**S02**	01	•	120°C	1.8	1.3	**464**	**480**	14.1	13.6	0.18	0.18	0.35	0.30
600313	**MVSI 36-660**	**S02**	10	•	120°C	2.6	1.8	**669**	**653**	21.3	20.2	0.24	0.26	0.60	0.50
600314	**MVSI 36-1050**	**S02**	20	•	120°C	4.3	2.8	**1107**	**1036**	32.6	30.4	0.44	0.53	0.80	0.75
600366	**MVSI 36-1500**	**S02**	20	•	120°C	6.3	-	**1615**	-	33.2	-	0.44	-	0.80	-
600381	**MVSI 36-1680**	**S02**	30	•	120°C	6.8	4.5	**1727**	**1659**	46.2	44.0	0.67	0.71	1.10	1.00
600513	**MVSI 36-2530**	**S02**	35	•	120°C	9.6	6.3	**2431**	**2334**	50.6	48.4	1.1	1.2	1.75	1.75
600491	**MVSI 36-2900**	**S08**	AF33	•	200°C	11.1	8.0	**2838**	**2919**	59.4	56.5	1.4	1.4	2.10	1.90
600504	**MVSI 36-3500**	**S08**	AF33	•	200°C	12.7	9.6	**3234**	**3509**	55.7	52.8	1.4	1.4	2.10	1.90
600502	**MVSI 36-3280**	**S02**	50	•	200°C	13.3	8.9	**3399**	**3263**	72.6	69.3	1.5	1.9	2.30	2.00
600503	**MVSI 36-4080**	**S02**	50	•	200°C	15.6	11.1	**3964**	**4077**	74.8	71.5	2.0	2.1	3.30	2.90
600256	**MVSI 36-4100**	**S90**	AF50	•	200°C	17.8	11.1	**4530**	**4077**	107	102	2.2	2.2	3.50	3.00
600257	**MVSI 36-4910**	**S90**	AF50	•	200°C	20.0	13.3	**5095**	**4893**	109	104	2.2	2.2	3.50	3.00
600470	**MVSI 36-6860**	**S02**	AF70	•	135°C	29.9	18.7	**7605**	**6846**	207	198	4.5	4.6	6.50	5.60
600471	**MVSI 36-8240**	**S02**	AF70	•	135°C	33.6	22.4	**8558**	**8217**	211	202	4.5	4.6	6.50	5.60
600472	**MVSI 36-11000**	**S02**	AF70	•	135°C	44.8	29.9	**11411**	**10954**	240	231	5.0	5.7	7.60	6.90
600276	**MVSI 36-14000**	**S02**	90	•	135°C	54.8	38.5	**13985**	**14124**	405	392	6.2	6.1	9.20	8.00
600201	**MVSI 36-20000**	**S90**	95	-	135°C	77.8	53.8	**19815**	**19734**	473	462	10.9	10.1	18.0	13.0

* Working Moment = 2 x Static Moment. Static Moment = Unbalance.
For 230 V, 60 Hz amperage, double the 460 V, 60 Hz amperage.

CSA Approval for Class I, Division 2, Groups A, B, C and D hazardous locations. Available upon request.

Product approved for European Directive 94/9/EC (EN 61241-0, EN 61241-1): ATEX II2D, tD A21 IP66 (temperature class detailed in table).

All listed products are in compliance with GOST R 51330.0-99, GOST R 51330.1, GOST R 51330.8-99, GOST R IEC 61241-1-1-99.

Product approved for IECEx Scheme following IEC 61241-0, 61241-1: II2D, tD A21 IP66 (Temperature class detailed in table).

In compliance with all applicable European Directives.

OVERALL DIMENSIONS (inches)

Model	Design	Type	A	B	C	D	E	Foot holes øG	Foot holes N°	F	H	I	L	M	N
MVSI 36-380	**S02**	**A**	8.31	6.02	4.92	**2.44-2.91****	**4.17**	**0.35**	**4**	0.94	2.40	1.81	4.06	3.94	4.61
MVSI 36-480	**S02**	**A**	9.25	6.02	4.92	**2.44-2.91****	**4.17**	**0.35**	**4**	0.94	2.40	2.28	4.06	3.94	4.61
MVSI 36-660	**S02**	**A**	10.04	7.05	5.98	**3.54**	**4.92**	**0.51**	**4**	1.10	2.87	2.13	5.00	5.04	5.55
MVSI 36-1050	**S02**	**A**	11.34	7.99	6.57	**4.13**	**5.51**	**0.51**	**4**	1.18	3.25	2.56	5.71	5.51	6.30
MVSI 36-1500	**S02**	**A**	11.34	7.99	6.57	**4.13**	**5.51**	**0.51**	**4**	1.18	3.25	2.56	5.71	5.51	6.30
MVSI 36-1680	**S02**	**A**	12.13	8.50	8.07	**4.72**	**6.69**	**0.67**	**4**	1.77	3.68	2.48	6.69	6.30	7.17
MVSI 36-2530	**S02**	**A**	17.13	8.86	8.07	**4.72**	**6.69**	**0.67**	**4**	2.13	4.11	4.63	7.36	6.38	7.99
MVSI 36-2900	**S08**	**A**	14.76	8.52	8.46	**3.94**	**7.09**	**0.67**	**4**	1.85	3.68	4.17	6.69	5.71	7.17
MVSI 36-3500	**S08**	**A**	14.76	8.52	8.46	**3.94**	**7.09**	**0.67**	**4**	1.85	3.68	4.17	6.69	5.71	7.17
MVSI 36-3280	**S02**	**A**	16.93	9.69	9.06	**5.51**	**7.48**	**0.67**	**4**	2.13	4.57	3.90	8.15	7.48	8.86
MVSI 36-4080	**S02**	**A**	16.93	9.69	9.06	**5.51**	**7.48**	**0.67**	**4**	2.13	4.57	3.90	8.15	7.48	8.86
MVSI 36-4100	**S90**	**A**	18.31	9.06	9.06	**5.51**	**7.48**	**0.67**	**4**	1.93	4.09	4.13	7.32	7.09	7.87
MVSI 36-4910	**S90**	**A**	18.31	9.06	9.06	**5.51**	**7.48**	**0.67**	**4**	1.93	4.09	4.13	7.32	7.09	7.87
MVSI 36-6860	**S02**	**A**	22.05	11.42	12.20	**6.10**	**10.04**	**0.98**	**4**	3.54	5.12	5.39	9.37	8.27	9.96
MVSI 36-8240	**S02**	**A**	22.05	11.42	12.20	**6.10**	**10.04**	**0.98**	**4**	3.54	5.12	5.39	9.37	8.27	9.96
MVSI 36-11000	**S02**	**A**	22.05	11.42	12.20	**6.10**	**10.04**	**0.98**	**4**	3.54	5.12	5.39	9.37	8.27	9.96
MVSI 36-14000	**S02**	**A**	26.77	14.57	15.35	**7.87**	**12.60**	**1.10**	**4**	3.54	7.09	6.30	12.99	10.63	13.78
MVSI 36-20000	**S90**	**A**	24.76	15.55	15.43	**7.87**	**12.60**	**1.10**	**4**	3.94	7.56	5.31	13.98	10.63	14.76

** Slot.

Type A

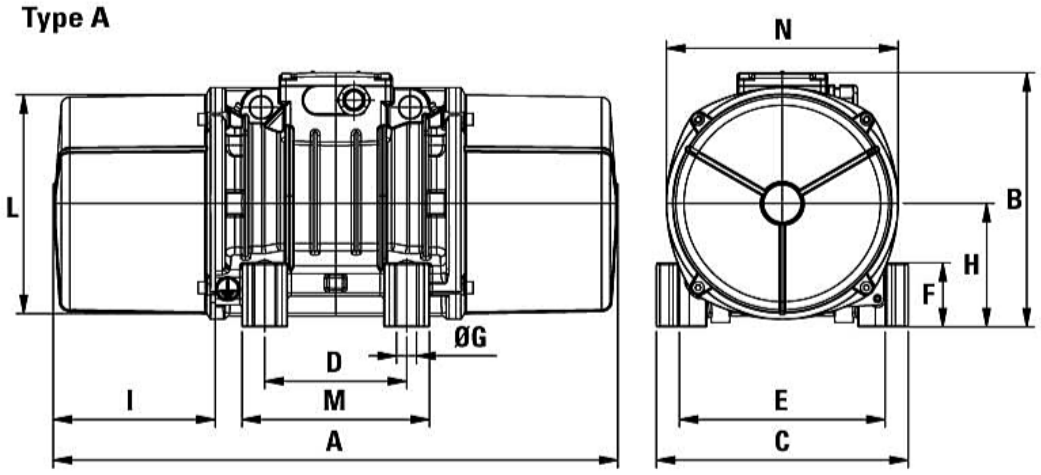

CHICAGO VIBRATOR PRODUCTS
642 NEWPORT AVENUE
WESTMONT, IL 60559
800-842-7284
630-920-9411
www.ChicagoVibrator.com
solutions@chivib.com